SB70 (G 3/4, 1, 1¼, 1½)

Features

- Shavo's Filter/Regulator combination unit for process control is an efficient space saving design for general applications in compressed air systems where effective contamination filtration, liquid water removal and controlled pressure is required.
- CE, ATEX, EAC Ex (CUTR 12), EAC(CUTR 10) approved.
- SIL3 capable as per IEC 61508.

PARAMETERS	SPECIFICATIONS
Fluid	Compressed Air
Pipe Sizes	3/4", 1", 1¼" 1½"
Pipe Threads	BSP - Standard BSPT, NPT - Optional
Maximum intel Pressure	17.5 bar (250 psi)
Max. Operating Temp. (Ambient)	+80° C
Filter Element Size	40 micron - Std. 5,25 micron - Optional
Filter Element Material	Sintered Bronze - Standard Porous Plastic - Optional
Material of Construction Body, Bonnet, Bowl Internal parts External parts	 Aluminium Alloy die-cast. Aluminium,SS304, SS316L, Acetal resin, Nylon,Brass etc SS 316L, Aluminium
Diaphragm Assembly	Synthetic Rubber without PTFE - Standard
Elastomers	Low temperature Nitrile(LNBR) -40°C to +80°C (Std) EPDM -35°C to +120°C Fluorocarbon (Viton-FKM) -20°C to +180°C
Bowl Capacity	1000 ml.
Regulated secondary pressure ranges	1.0 to 10.0 bar (15.0 - 150 psi) - Standard 0.35 to 3.5 bar (5.0 - 50 psi) - Optional 0.86 to 8.6 bar (12.5 - 125 psi) - Optional 0.21 to 2.10 bar (3 - 30 psi) - Optional 1.70 to 17.5 bar (25 - 250 psi) - Optional
Standard Nominal Flow Rate at 10 bar (150psi)inlet pressure 6 bar (87 psi) set pr. and a drop of 1 bar(14.5 psi)from set	3/4" - 515 scfm (243 dm³/sec) 1" - 600 scfm (283 dm³/sec) 1¼" - 600 scfm (283 dm³/sec) 1½" - 600 scfm (283 dm³/sec)
CV Value	3/4" - (9.70) 1" - (11.30) 1¼" - (11.30) 1½" - (11.30)
Drain	Manual - Standard
Regulator Type	Relieving - Standard Non - Relieving - Optional
Pressure Adjustment	Square headed screw - Std
Gauge Port	1/8" BSPT (Fe) - Standard 1/8" NPT (Fe) - Optional
Gauge size (dial size)	50 mm (Nominal)
Mounting	Panel Mounting - Standard Mounting Bracket - Optional
Weight	3.5 Kgs.

Pressure Gauge (scale) : Kg/cm² (PSI) - Standard (For Domestic Market)
Bar (PSI) - Standard (Export)

+Values indicated are with 40 micron elements, with finer elements these values will be lower.

Note: 1) Pressure gauge will have ATEX approval.
2) Pressure gauge will not have CE, EAC, SIL3 and NACE MR 0175 approval.

Size	Flow (scfm)	Element (um)	Drain	Bowl	Range (psi)	Operation	Model
G 3/4	515 scfm (243 dm³/sec)	40	Manual	Metal	12 - 125 psi	Relieving	SB70Q-6G-M7M/RNLN-A
G 1	600 scfm (283 dm³/sec)	40	Manual	Metal	12 - 125 psi	Relieving	SB70Q-8G-M7M/RNLN-A
G 1¼	600 scfm (283 dm³/sec)	40	Manual	Metal	12 - 125 psi	Relieving	SB70Q-AG-M7M/RNLN-A
G 1½	600 scfm (283 dm³/sec)	40	Manual	Metal	12 - 125 psi	Relieving	SB70Q-BG-M7M/RNLN-A

SB70 (G 3/4, 1, 1¼, 1½)

Option Selector

Sample Model Number → S B 7 0 Q - 4 B - M 7 D / R G M N - X X X - X X X

Position → 0 1 2 3 4 - 5 6 - 7 8 9 / 10 11 12 13 - 14 15 16 - 17 18 19

Position	Field	Options
0		S = Shavo
1	Product	B = Filter Cum Regulator Combination Unit
2 3	Series	70 = "Vayu" - 1" Basic
4	Type	[H] = Low Temperature Nitrile(LNBR) - Square headed type Q = EPDM Elastomers-Square headed type [U] = Fluorocarbon (Viton)Elastomers-Square headed type
5	Size	6 = 3/4" 8 = 1" A = 1¼" B = 1½"
6	Port Thread	
7	Drain	M = Manual
8	Filter Element	1 = 05 M Porous Plastic 3 = 40 M Porous Plastic 6 = 05 M Sintered Bronze 8 = 40 M Sintered Bronze
9	Bowl	M = Metal Bowl without Sight Glass
10	Relief	R = Relieving N = Non - Reliving
11	Gauge	N = No Pr. Gauge G = With Pr. Gauge(SS316)(50mm (with ATEX approved))
12	Sec. Pr. Range	C = 0.21 to 2.10 bar (3.0 - 30 psi) E = 0.35 to 3.5 bar (5.0 - 50 psi) L = 0.86 to 8.6 bar (12.5 - 125 psi) M = 1.0 to 10.0 bar (15.0 - 150 psi) *[S] = 1.70 to 17.5 bar (25 - 250 psi)
13	Mounting & Accessories	N = No MTG. bracket B = Wall bracket Fitted(S.S.316) L = With 'L' type bracket (S.S.316)

	Main Port	Gauge Port
A	NPT	BSPT
B	BSPT	BSPT
G	BSP	BSPT
N	NPT	NPT

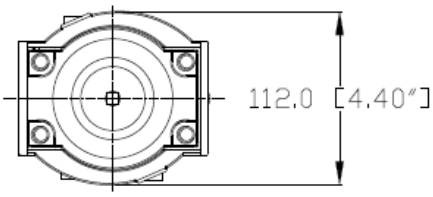

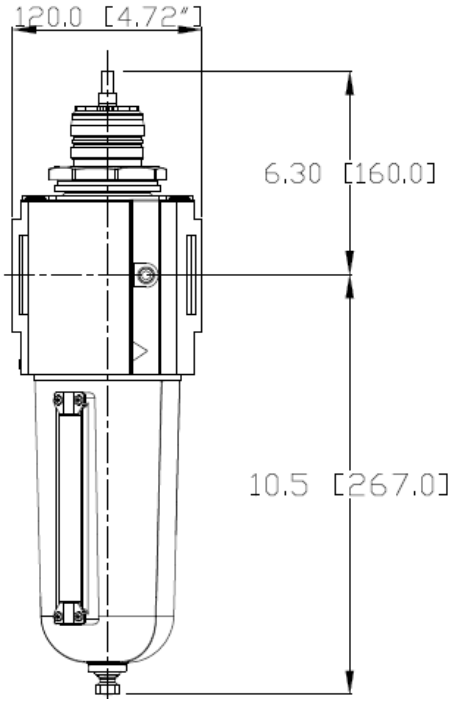

SB70 (G 3/4, 1, 1¼, 1½)

14	15	16	Test / Approval
A	0	0	ATEX
A	0	1	UKEX
A	0	2	UKCA
A	0	3	ATEX, UKEX, EAC Ex,UKCA
A	0	4	ATEX, UKEX, EAC Ex
A	0	5	ATEX, UKEX, UKCA
A	0	6	ATEX, UKEX, EAC Ex
B	0	0	ATEX, CE
B	0	1	ATEX, CE, UKEX, EAC Ex, UKCA
B	0	2	ATEX, CE, UKEX, EAC Ex
B	0	3	ATEX, CE, UKEX, UKCA
B	0	4	ATEX, CE, UKCA, EAC Ex
B	0	5	ATEX, CE, EAC Ex
C	0	0	CE
C	0	1	CE, UKEX, EAC Ex, UKCA
C	0	2	CE, UKEX, EAC Ex
C	0	3	CE, UKEX, UKCA
C	0	4	CE, EAC Ex, UKCA
C	0	5	CE, EAC Ex
D	0	0	ATEX, EAC
D	0	1	ATEX, EAC, UKEX, EAC Ex, UKCA
D	0	2	ATEX, EAC, UKEX, EAC Ex
D	0	3	ATEX, EAC, UKEX, UKCA
D	0	4	ATEX, EAC, EAC Ex, UKCA
E	0	0	EAC
E	0	1	EAC, UKEX, EAC Ex, UKCA
E	0	2	EAC, UKEX, EAC Ex
E	0	3	EAC, UKEX, UKCA
E	0	4	EAC, EAC Ex, UKCA
F	0	0	ATEX, SIL3
F	0	1	ATEX, SIL3, UKEX, EAC Ex, UKCA
F	0	2	ATEX, SIL3, UKEX, EAC Ex
F	0	3	ATEX, SIL3, UKEX, UKCA
F	0	4	ATEX, SIL3, EAC Ex, UKCA
F	0	5	ATEX, SIL3, EAC Ex
G	0	0	CE, EAC
G	0	1	CE, EAC, UKEX, EAC Ex, UKCA
G	0	2	CE, EAC, UKEX, EAC Ex
G	0	3	CE, EAC, UKEX, UKCA
G	0	4	CE, EAC, EAC Ex, UKCA
H	0	0	CE, SIL3
H	0	1	CE, SIL3, UKEX, EAC Ex, UKCA
H	0	2	CE, SIL3, UKEX, EAC Ex
H	0	3	CE, SIL3, UKEX, UKCA
H	0	4	CE, SIL3, EAC Ex, UKCA
H	0	5	CE, SIL3, EAC Ex
J	0	0	EAC, SIL3
J	0	1	EAC, SIL3, UKEX, EAC Ex, UKCA
J	0	2	EAC, SIL3, UKEX, EAC Ex
J	0	3	EAC, SIL3, UKEX, UKCA
J	0	4	EAC, SIL3, EAC Ex, UKCA
K	0	0	CE, EAC, SIL3

SB70 (G 3/4, 1, 1¼, 1½)

K	0	1	CE, EAC, SIL3, UKEX, EAC Ex, UKCA
K	0	2	CE, EAC, SIL3, UKEX, UKCA
K	0	3	CE, EAC, SIL3, UKEX, EAC Ex
K	0	4	CE, EAC, SIL3, EAC Ex, UKCA
L	0	0	ATEX, EAC, SIL3
L	0	1	ATEX, EAC, SIL3, UKEX, EAC Ex, UKCA
L	0	2	ATEX, EAC, SIL3, UKEX, EAC Ex
L	0	3	ATEX, EAC, SIL3, UKEX, UKCA
L	0	4	ATEX, EAC, SIL3, EAC Ex, UKCA
M	0	0	ATEX, CE, SIL3
M	0	1	ATEX, CE, SIL3, UKEX, EAC Ex, UKCA
M	0	2	ATEX, CE, SIL3, UKEX, EAC Ex
M	0	3	ATEX, CE, SIL3, UKEX, UKCA
M	0	4	ATEX, CE, SIL3, EAC Ex, UKCA
N	0	0	ATEX, CE, EAC
N	0	1	ATEX, CE, EAC, UKEX, EAC Ex, UKCA
N	0	2	ATEX, CE, EAC, UKEX, EAC Ex
N	0	3	ATEX, CE, EAC, UKEX, UKCA
N	0	4	ATEX, CE, EAC, EAC Ex, UKCA
[O]	[0]	[0]	Other customer special requirement if Any
P	0	0	ATEX, CE, EAC, SIL3
P	0	1	ATEX, CE, EAC, SIL3, UKEX, EAC Ex, UKCA
P	0	2	ATEX, CE, EAC, SIL3, UKEX, EAC Ex
P	0	3	ATEX, CE, EAC, SIL3, UKEX, UKCA
P	0	4	ATEX, CE, EAC, SIL3, EAC Ex, UKCA
Q	0	0	ATEX, EAC Ex
R	0	0	EAC Ex
R	0	1	EAC Ex, UKEX, UKCA
R	0	2	EAC Ex, UKCA
S	0	0	SIL3
S	0	1	SIL3, UKEX, EAC Ex, UKCA
S	0	2	SIL3, UKEX, EAC Ex
S	0	3	SIL3, UKEX, UKCA
S	0	4	SIL3, EAC Ex, UKCA
V	0	0	ATEX, CE, SIL3, EAC Ex
V	0	1	ATEX, CE, SIL3, EAC Ex, UKEX, UKCA
V	0	2	ATEX, CE, SIL3, EAC Ex, UKEX
V	0	3	ATEX, CE, SIL3, EAC Ex, UKCA
X	X	X	STANDARD UNITS WITHOUT ANY CERTIFICATE / APPROVAL
Y	0	0	ATEX, SIL3, EACEx
y	0	1	ATEX, SIL3, EACEx, UKEX, UKCA
Y	0	2	ATEX, SIL3, EAC Ex, UKEX
Y	0	3	ATEX, SIL3, EACEx, UKCA
Z	0	1	CE, SIL3, EAC Ex, UKEX, UKCA
Z	0	2	CE, SIL3, EAC Ex, UKEX
Z	0	3	CE, SIL3, EAC Ex, UKCA

SB70 (G 3/4, 1, 1¼, 1½)

17	18	19	Compliance
X	X	X	Standard Unit Wthout any Complinace
A	0	1	RoHS 3 Compliance
A	0	2	REACH Compliance
A	0	3	Copper Free (Only Applicable Aluminium Version)
A	0	4	RoHS3, REACH Compliance
A	0	5	RoHS3, REACH, Copper Free (Only Applicable for Aluminium Version)
A	0	6	RoHS3, Copper Free (Only Applicable for Aluminium Version)
A	0	7	REACH, Copper Free (Only Applicable for Aluminium Version)

Note : Options shown in [ ] bracket are special, please contact manufacturing.
*** [S] option available with Hex headed pressure adjustment only.**