OIL REMOVAL FILTER - VAYU STANDARD

SF20C (G 1/4, G 3/8, G 1/2)

Features

- Shavo's coalescing type Oil Removal Filter - Compact size, low flow unit.
- Two stage 'Filtration' conditions the air to technically oil free standard.
- CE, ATEX, EAC[CUTR10(equivalent to GOST R&K)] approved.
- SIL 3 capable as per IEC 61508.

PARAMETERS	SPECIFICATIONS
Fluid	Compressed Air
Pipe Sizes	1/4", 3/8",1/2"
Pipe Thread	BSP - Standard BSPT, NPT - Optional
Max. Inlet Pressure	17.5 bar (250 psi)
Max. Operating Temperature (Ambient)	+80°C
Filter Element material	Synthetic fibre and polyurethane foam
Material of Construction Body, Bowl Internal parts External parts	 Aluminium Alloy die-cast Alu.,SS304, SS316L,Acetal resin, Nylon, Brass etc. SS 316L, Aluminium
Elastomers	Nitrile - Standard
Standard Nominal Flow Rate at 6 bar (87 psi) supply pressure and 1 bar (14.5 psi) pressure drop	1/4" - 15 scfm (7 dm3/sec) 3/8" - 15 scfm (7 dm3/sec) 1/2" - 15 scfm (7 dm3/sec)
CV Value	1/4" - (0.28) 3/8" - (0.28) 1/2" - (0.28)
Bowl Capacity	135 ml
Drain	Manual - Std
Particle Removal Maximum Oil Removal content	upto 0.01 micron upto 0.01 ppm
Weight	0.5 Kgs.

Size	Flow (scfm)	Drain	Bowl	Model
G 1/4	15 scfm (7 dm³/sec)	Manual	Metal	SF20C-2G-MODN-A
G 3/8	15 scfm (7 dm³/sec)	Manual	Metal	SF20C-3G-MODN-A
G 1/2	15 scfm (7 dm³/sec)	Manual	Metal	SF20C-4G-MODN-A

SHAVO PROCESS CONTROL

SF20C (G 1/4, G 3/8, G 1/2)

Option Selector

Sample Model Number → S F 2 0 C - 2 A - M O D N - X X X - X X X

Position → 0 1 2 3 4 - 5 6 - 7 8 9 10 - 11 12 13 - 14 15 16

Position		Code		Description
0		S	=	Shavo
1	Product	F	=	Filter
2 3	Series	20	=	"Vayu"
4	Type	C	=	Oil Removal (with Nitrile Elastomers)
5	Size	2	=	1/4"
		3	=	3/8"
		4	=	1/2"
6	Port Thread	A	=	NPT
		B	=	ISO Rc Taper (=BSPT)
		G	=	ISO 'Parallel' (=BSP)
7	Drain	M	=	Manual
8	Filter Element	0	=	Oil Removal
9	Bowl	D	=	Metal Bowl with Sight Glass
		M	=	Metal Bowl without Sight Glass
10	Mounting & Accessories	N	=	No Mounting Bracket,
		B	=	Wall Mounting Bracket (SS316)

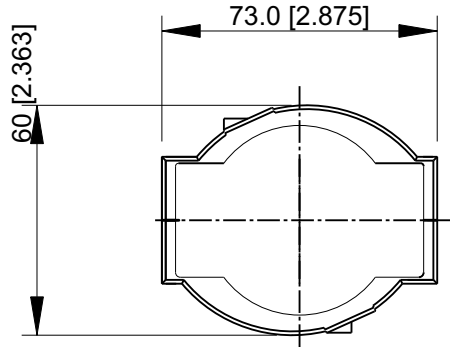

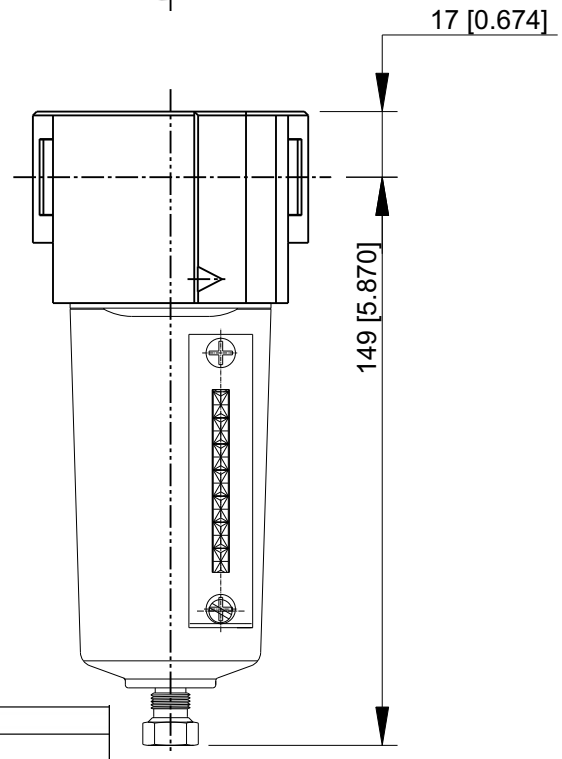

11	12	13	Test / Approval
A	0	0	ATEX
A	0	1	UKEX
A	0	2	UKCA
A	0	3	ATEX, UKEX, EAC Ex,UKCA
A	0	4	ATEX, UKEX, EAC Ex
A	0	5	ATEX, UKEX, UKCA
A	0	6	ATEX, UKEX, EAC Ex
B	0	0	ATEX, CE
B	0	1	ATEX, CE, UKEX, EAC Ex, UKCA
B	0	2	ATEX, CE, UKEX, EAC Ex
B	0	3	ATEX, CE, UKEX, UKCA
B	0	4	ATEX, CE, UKCA, EAC Ex
B	0	5	ATEX, CE, EAC Ex
C	0	0	CE
C	0	1	CE, UKEX, EAC Ex, UKCA
C	0	2	CE, UKEX, EAC Ex
C	0	3	CE, UKEX, UKCA
C	0	4	CE, EAC Ex, UKCA
C	0	5	CE, EAC Ex

SF20C (G 1/4, G 3/8, G 1/2)

D	0	0	ATEX, EAC
D	0	1	ATEX, EAC, UKEX, EAC Ex, UKCA
D	0	2	ATEX, EAC, UKEX, EAC Ex
D	0	3	ATEX, EAC, UKEX, UKCA
D	0	4	ATEX, EAC, EAC Ex, UKCA
E	0	0	EAC
E	0	1	EAC, UKEX, EAC Ex, UKCA
E	0	2	EAC, UKEX, EAC Ex
E	0	3	EAC, UKEX, UKCA
E	0	4	EAC, EAC Ex, UKCA
F	0	0	ATEX, SIL3
F	0	1	ATEX, SIL3, UKEX, EAC Ex, UKCA
F	0	2	ATEX, SIL3, UKEX, EAC Ex
F	0	3	ATEX, SIL3, UKEX, UKCA
F	0	4	ATEX, SIL3, EAC Ex, UKCA
F	0	5	ATEX, SIL3, EAC Ex
G	0	0	CE, EAC
G	0	1	CE, EAC, UKEX, EAC Ex, UKCA
G	0	2	CE, EAC, UKEX, EAC Ex
G	0	3	CE, EAC, UKEX, UKCA
G	0	4	CE, EAC, EAC Ex, UKCA
H	0	0	CE, SIL3
H	0	1	CE, SIL3, UKEX, EAC Ex, UKCA
H	0	2	CE, SIL3, UKEX, EAC Ex
H	0	3	CE, SIL3, UKEX, UKCA
H	0	4	CE, SIL3, EAC Ex, UKCA
H	0	5	CE, SIL3, EAC Ex
J	0	0	EAC, SIL3
J	0	1	EAC, SIL3, UKEX, EAC Ex, UKCA
J	0	2	EAC, SIL3, UKEX, EAC Ex
J	0	3	EAC, SIL3, UKEX, UKCA
J	0	4	EAC, SIL3, EAC Ex, UKCA
K	0	0	CE, EAC, SIL3
K	0	1	CE, EAC, SIL3, UKEX, EAC Ex, UKCA
K	0	2	CE, EAC, SIL3, UKEX, UKCA
K	0	3	CE, EAC, SIL3, UKEX, EAC Ex
K	0	4	CE, EAC, SIL3, EAC Ex, UKCA
L	0	0	ATEX, EAC, SIL3
L	0	1	ATEX, EAC, SIL3, UKEX, EAC Ex, UKCA
L	0	2	ATEX, EAC, SIL3, UKEX, EAC Ex
L	0	3	ATEX, EAC, SIL3, UKEX, UKCA
L	0	4	ATEX, EAC, SIL3, EAC Ex, UKCA
M	0	0	ATEX, CE, SIL3
M	0	1	ATEX, CE, SIL3, UKEX, EAC Ex, UKCA
M	0	2	ATEX, CE, SIL3, UKEX, EAC Ex
M	0	3	ATEX, CE, SIL3, UKEX, UKCA
M	0	4	ATEX, CE, SIL3, EAC Ex, UKCA
N	0	0	ATEX, CE, EAC
N	0	1	ATEX, CE, EAC, UKEX, EAC Ex, UKCA
N	0	2	ATEX, CE, EAC, UKEX, EAC Ex
N	0	3	ATEX, CE, EAC, UKEX, UKCA
N	0	4	ATEX, CE, EAC, EAC Ex, UKCA

SF20C (G 1/4, G 3/8, G 1/2)

[O]	[0]	[0]	Other customer special requirement if Any
P	0	0	ATEX, CE, EAC, SIL3
P	0	1	ATEX, CE, EAC, SIL3, UKEX, EAC Ex, UKCA
P	0	2	ATEX, CE, EAC, SIL3, UKEX, EAC Ex
P	0	3	ATEX, CE, EAC, SIL3, UKEX, UKCA
P	0	4	ATEX, CE, EAC, SIL3, EAC Ex, UKCA
Q	0	0	ATEX, EAC Ex
R	0	0	EAC Ex
R	0	1	EAC Ex, UKEX, UKCA
R	0	2	EAC Ex, UKCA
S	0	0	SIL3
S	0	1	SIL3, UKEX, EAC Ex, UKCA
S	0	2	SIL3, UKEX, EAC Ex
S	0	3	SIL3, UKEX, UKCA
S	0	4	SIL3, EAC Ex, UKCA
V	0	0	ATEX, CE, SIL3, EAC Ex
V	0	1	ATEX, CE, SIL3, EAC Ex, UKEX, UKCA
V	0	2	ATEX, CE, SIL3, EAC Ex, UKEX
V	0	3	ATEX, CE, SIL3, EAC Ex, UKCA
X	X	X	STANDARD UNITS WITHOUT ANY CERTIFICATE / APPROVAL
Y	0	0	ATEX, SIL3, EACEx
y	0	1	ATEX, SIL3, EACEx, UKEX, UKCA
Y	0	2	ATEX, SIL3, EAC Ex, UKEX
Y	0	3	ATEX, SIL3, EACEx, UKCA
Z	0	1	CE, SIL3, EAC Ex, UKEX, UKCA
Z	0	2	CE, SIL3, EAC Ex, UKEX
Z	0	3	CE, SIL3, EAC Ex, UKCA

14	15	16	Compliance
X	X	X	Standard Unit Without any Compliance
A	0	1	RoHS 3 Compliance
A	0	2	REACH Compliance
A	0	3	Copper Free (Only Applicable Aluminium Version)
A	0	4	RoHS3, REACH Compliance
A	0	5	RoHS3, REACH, Copper Free (Only Applicable for Aluminium Version)
A	0	6	RoHS3, Copper Free (Only Applicable for Aluminium Version)
A	0	7	REACH, Copper Free (Only Applicable for Aluminium Version)